DZbotics

DIY KIT · BUILD MANUAL

Build your Nameless.

Every part in the box. Every step in order. You'll have a penguin on your desk by the end of it.



MANUAL V0.1 MADE IN INDIA DZBOTICS

Pengu

BEFORE YOU START

Welcome to the build.

Nameless is a palm-sized desk pet. A penguin lives on its little screen, gets hungry, gets sleepy and gets happy when you show up. It runs completely offline: no Wi-Fi, no app, no account. You plug it in and it wakes up.

This kit lets you build it yourself, piece by piece. Here's what you'll have on your desk when you're done.

- **Pet:** feed it, play with it, let it sleep
- **Games:** six penguin mini-games
- **Timer:** a 20-minute focus countdown
- **Quotes & Jokes:** 50+ of each
- **Calm:** a guided breathing coach
- **LED & Party:** glow light and a silent dance mode
- **Check-ins:** water, posture and how-was-your-day nudges
- **Touch pads:** pet it, tap it, no buttons

BUILD TIME	SKILL LEVEL	STEPS
2 hours	**Beginner**	**16**

What you'll need

- Soldering iron
- Flux paste (optional)
- Solder wire
- Wire cutter/stripper
- Superglue (feviquick)
- Ruler
- Double side tape
- Well-ventilated room
- Your enthusiasm

HEADS UP : Safety note — when soldering ensure the room is properly ventilated.

IN THE BOX

Check your parts.



#	PART	QTY	TYPE	✓
01	Custom PCB	1	Electronics	☐
02	1.3" OLED display with pins	1	Electronics	☐
03	ESP32-C3 Super Mini	1	Electronics	☐
04	3-pin header	4	Electronics	☐
05	TTP233 touch sensor	3	Electronics	☐
06	USB-C board (male)	1	Electronics	☐
07	USB-C board (female)	1	Electronics	☐
08	WS2812B LED	1	Electronics	☐
09	3-pin connector with wire	4	Wiring	☐
10	Wires	2	Wiring	☐
11	Face front	1	3D printed	☐
12	Face back	1	3D printed	☐
13	Body front	1	3D printed	☐
14	Body back	1	3D printed	☐
15	Baseplate	1	3D printed	☐
16	Hands	2	3D printed	☐

STEP 01

Cut and strip the wires.

Cut each wire on the 3-pin connectors to length and strip the ends, ready for soldering.

PARTS

- 3-pin connector with wire ×4
- Wire cutter
- Ruler

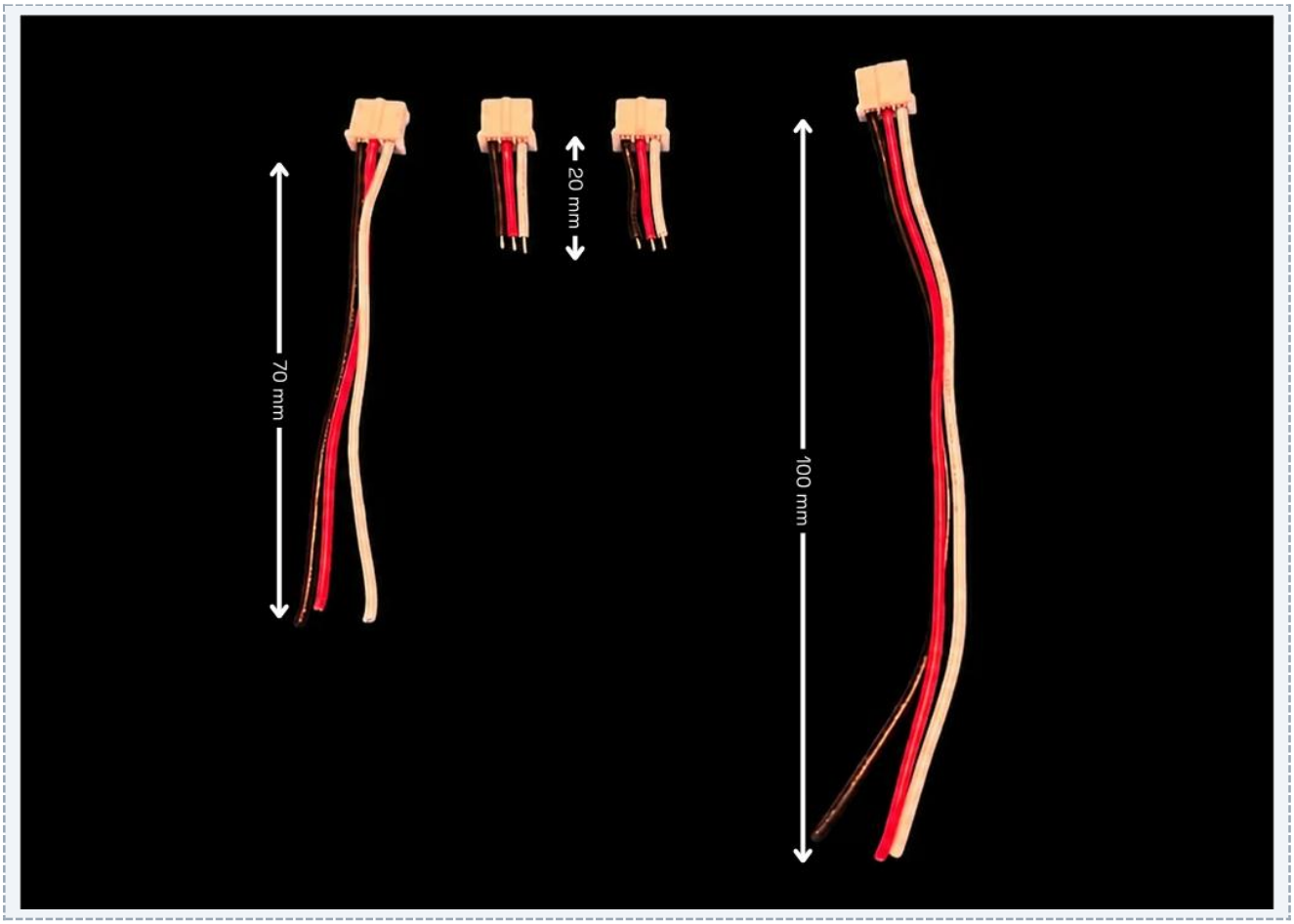

FIG 1.1

WIRE	CUT TO	STRIP
Connector wire 1	20 mm	4 mm
Connector wire 2	20 mm	4 mm
Connector wire 3	70 mm	4 mm
Connector wire 4	100 mm	4 mm

1. Measure each wire against the ruler and mark the cut length from the table above.
2. Cut the wire on the free end (the end without the connector) with the wire cutter.
3. Strip the end of each wire to the length in the table.

STEP 02

Solder the wires to the touch sensors and LED.

Solder the connector wires onto the three touch sensors and the LED.

PARTS

- TTP233 touch sensor ×3
- WS2812B LED
- 3-pin connector with wire
- Soldering iron and wire

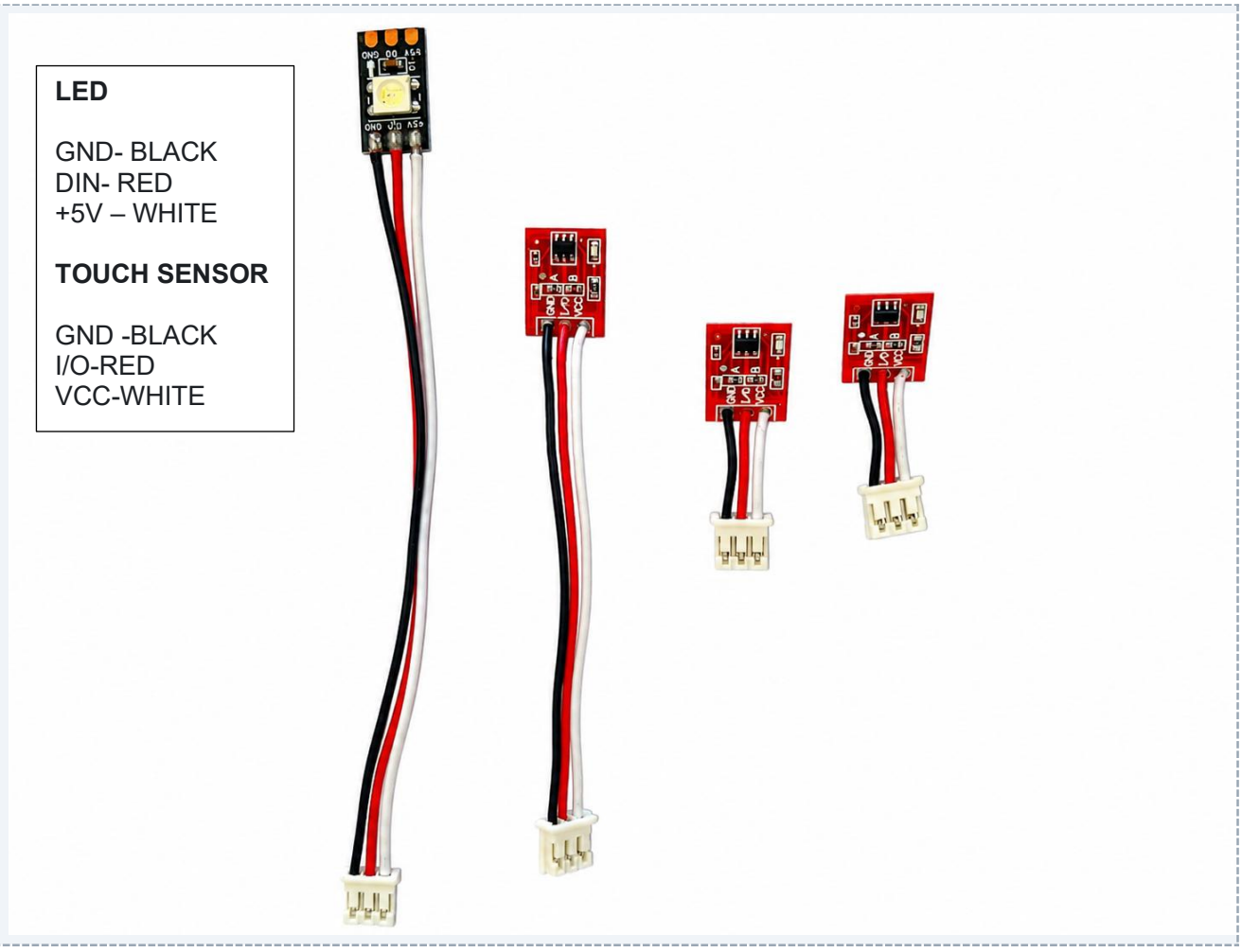

FIG 2.1

1 Solder each connector to the touch sensors and the LED exactly as shown in the picture.

2 Check that the wire colours match the picture on every board before you move on.

TIP Don’t want the LED on the touch sensors? Remove the resistor from the touch sensors.

STEP 03

Solder the ESP32-C3 onto the custom PCB.

Solder the ESP32-C3 Super Mini onto the custom PCB.

PARTS

- Custom PCB
- ESP32-C3 Super Mini
- Soldering iron
- Flux

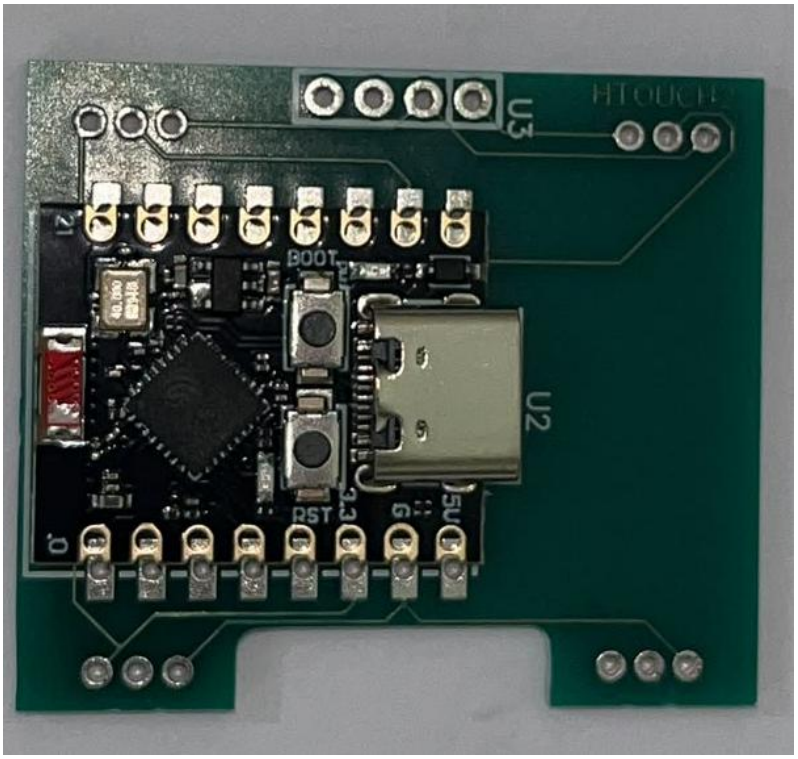

FIG 3.1

1 Solder the ESP32-C3 onto the PCB in the same orientation as shown in the picture.

STEP 04

Solder the 3-pin connectors onto the custom PCB.

Solder the four 3-pin connectors onto the custom PCB.

PARTS

- Custom PCB with ESP32-C3
- 3-pin connector x 4
- Soldering iron
- Flux

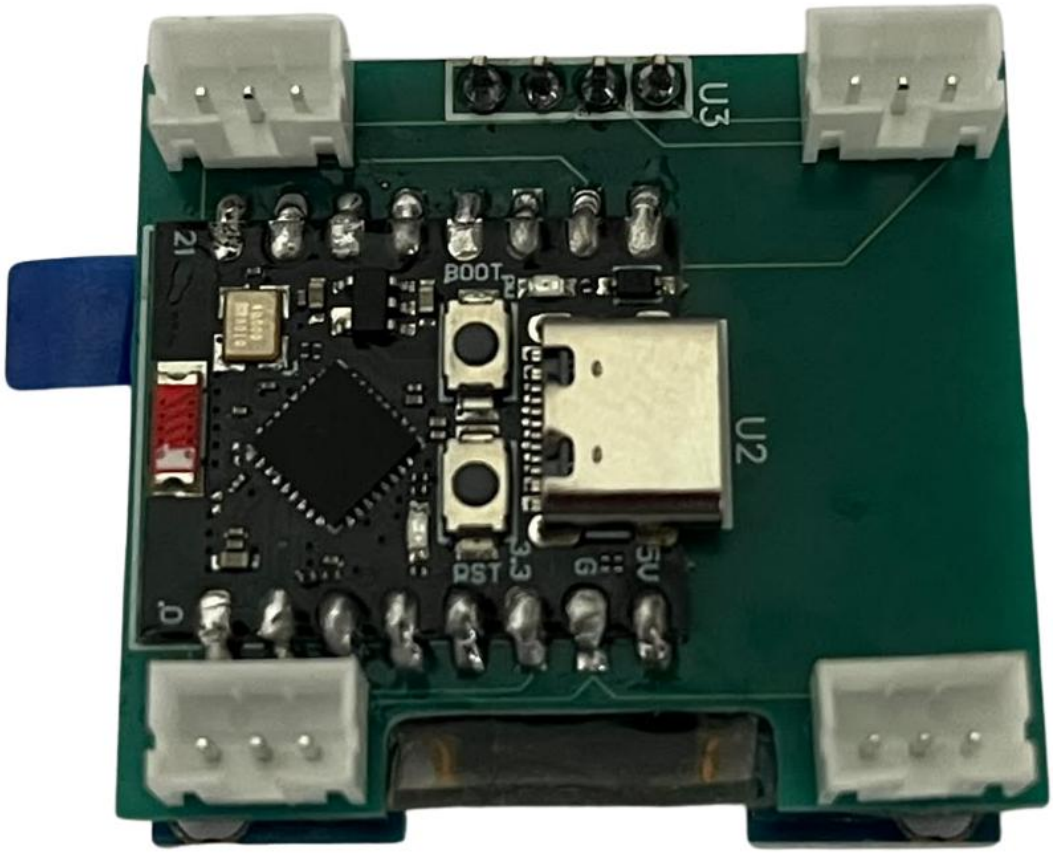

FIG 4.1

1 Solder all 4 connectors onto the PCB in the same orientation as shown in the picture.

NOTE Orientation is very important. All 4 connectors must face the same way as in the picture.

STEP 05

Solder the display onto the PCB.

Solder the display onto the custom PCB.

PARTS

- Custom PCB
- Display and 4 pins
- Soldering iron and wire
- Flux

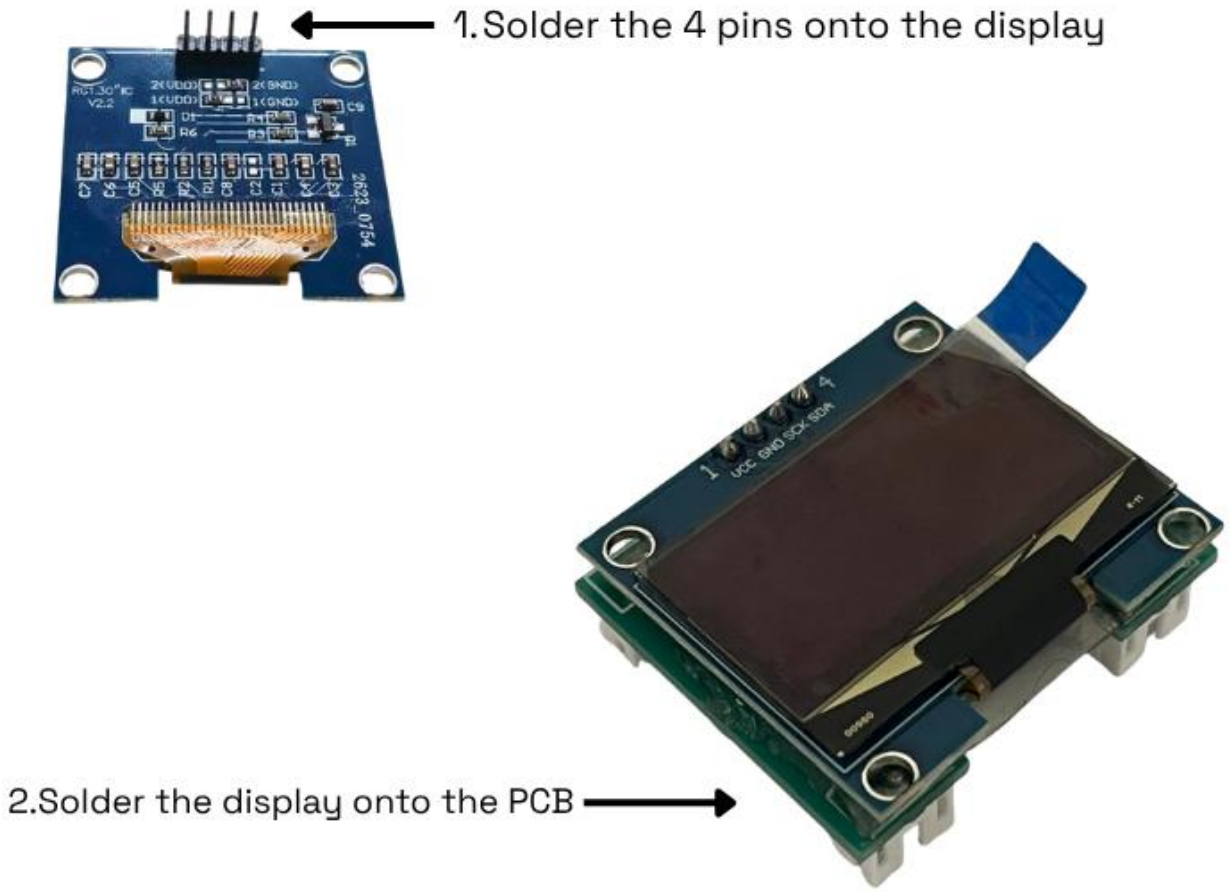

FIG 5.1

1 Solder the display onto the PCB in the same orientation as shown in the picture.

STEP 06

Solder the power cables to the USB-C boards.

Solder the power cables to the USB-C male and female boards.

PARTS

- Power cables
- USB-C male board
- USB-C female board
- Soldering iron
- Flux



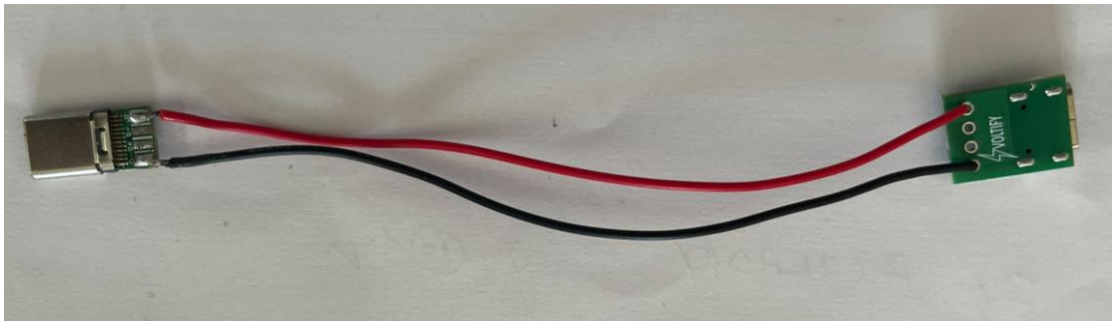

FIG 6.1

1 Solder the power cables to the USB-C male and female boards as shown in the picture.

STEP 07

Attach the front head to the front body.

Attach the front head to the front body. Use super glue for additional strength.

PARTS

- Front head
- Front body
- Super glue

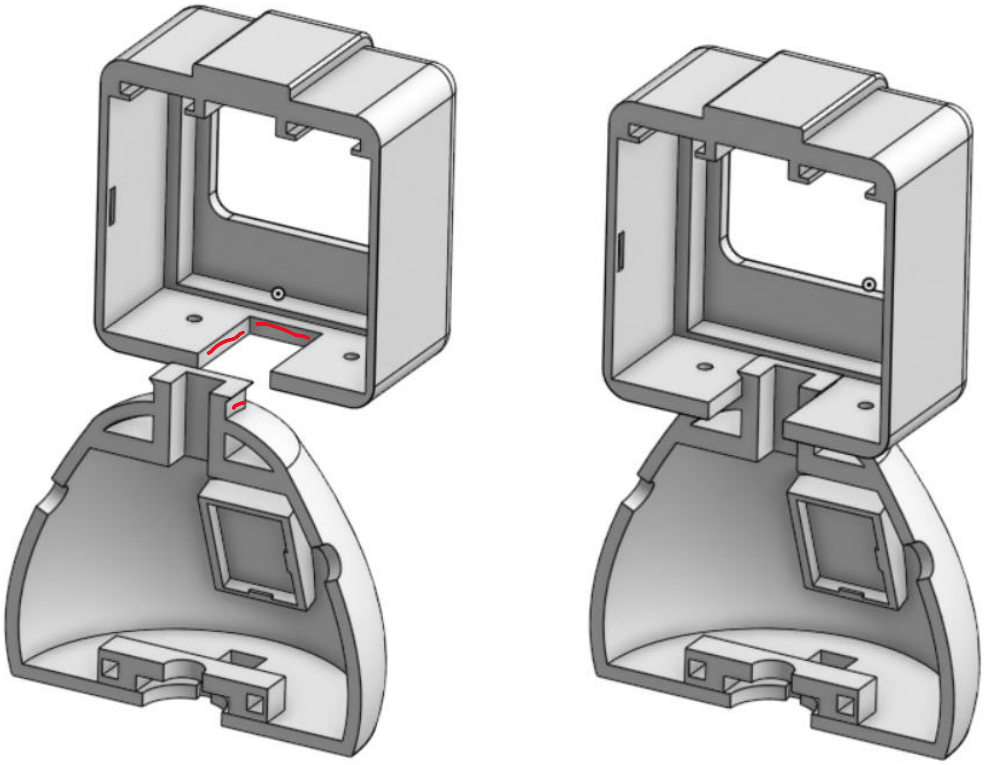

FIG 7.1

1 Attach the front head to the front body. Use super glue at the points marked in red for additional strength.

STEP 08

Attach the stomach touch sensor.

Attach the stomach touch sensor.

PARTS

- Stomach touch sensor
- Front body assembly



FIG 8.1

1 Attach the stomach touch sensor as shown in the picture.

STEP 09

Attach the LED to the body.

Attach the LED to the body.

PARTS

- LED
- Body

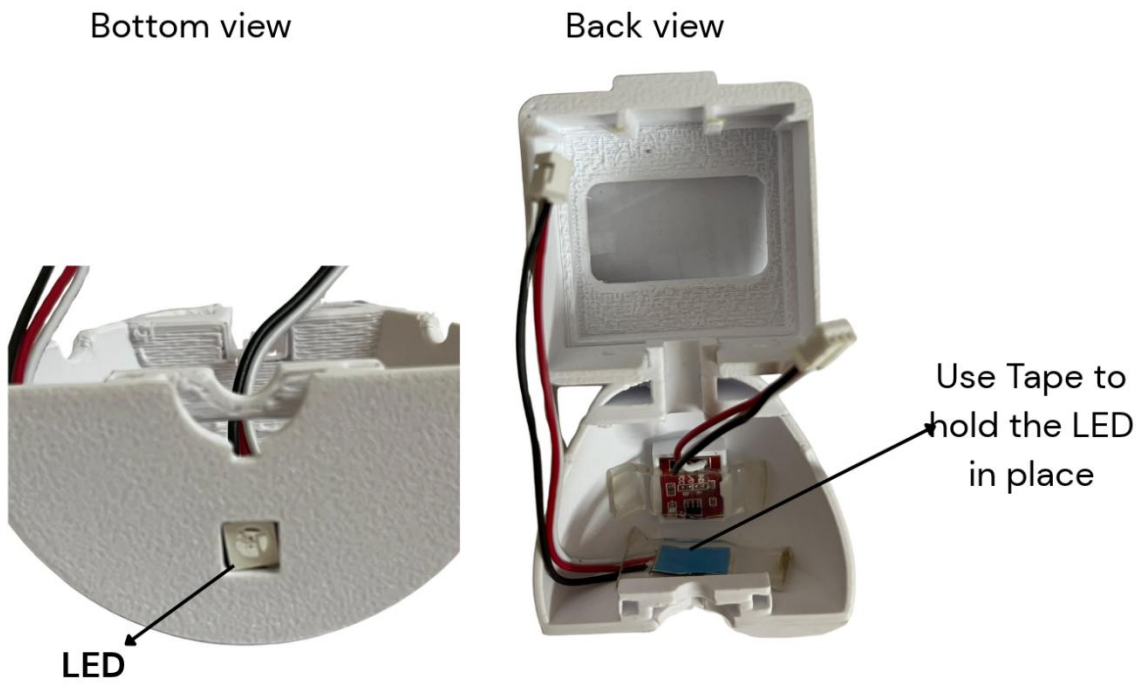

FIG 9.1 BOTTOM AND BACK VIEW OF LED PLACEMENT

1 Attach the LED to the body as shown in the picture. Use double side tape to hold it in place. Make sure it sits inside the slot.

STEP 10

Attach the USB-C port to the baseplate.

Attach the USB-C port to the baseplate. Use super glue to hold it in place.

PARTS

- USB-C port
- Baseplate
- Super glue



FIG 10.1

1 Attach the USB-C port to the baseplate. Apply super glue at the red spots to hold it in place.

STEP 11

Attach the baseplate to the front body.

Attach the baseplate to the front body.

PARTS

- Baseplate
- Front body

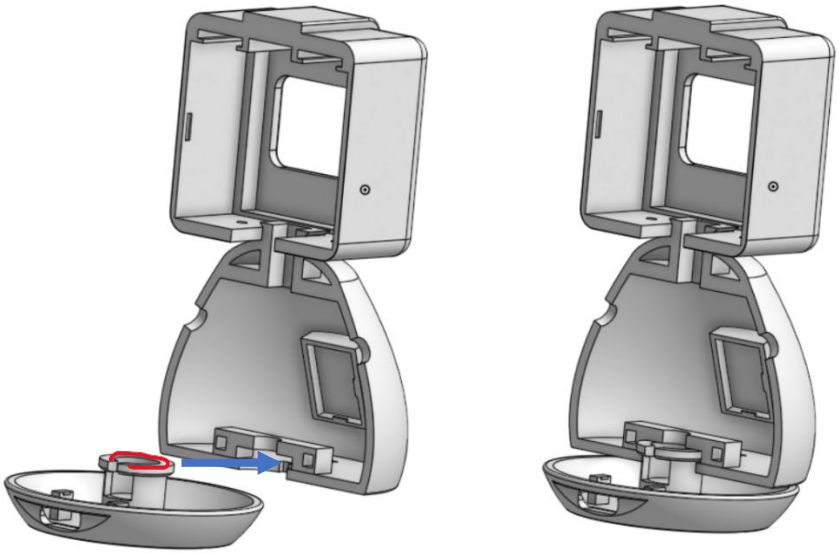

FIG 11.1

1 Attach the baseplate to the front body as shown in the picture. Apply super glue at the red marked parts.

STEP 12

Place the hands.

Place the hands on the body.

PARTS

- Hands
- Body



FIG 12.1

1 Place the hands as shown in the picture.

STEP 13

Close the body.

Close the body.

PARTS

- Body



FIG 13.1

1 Close the body as shown in the picture.

STEP 14

Put the PCB inside and connect the connectors.

Put the PCB inside the body and connect all the connectors as per the diagram.

PARTS

- Custom PCB
- Body

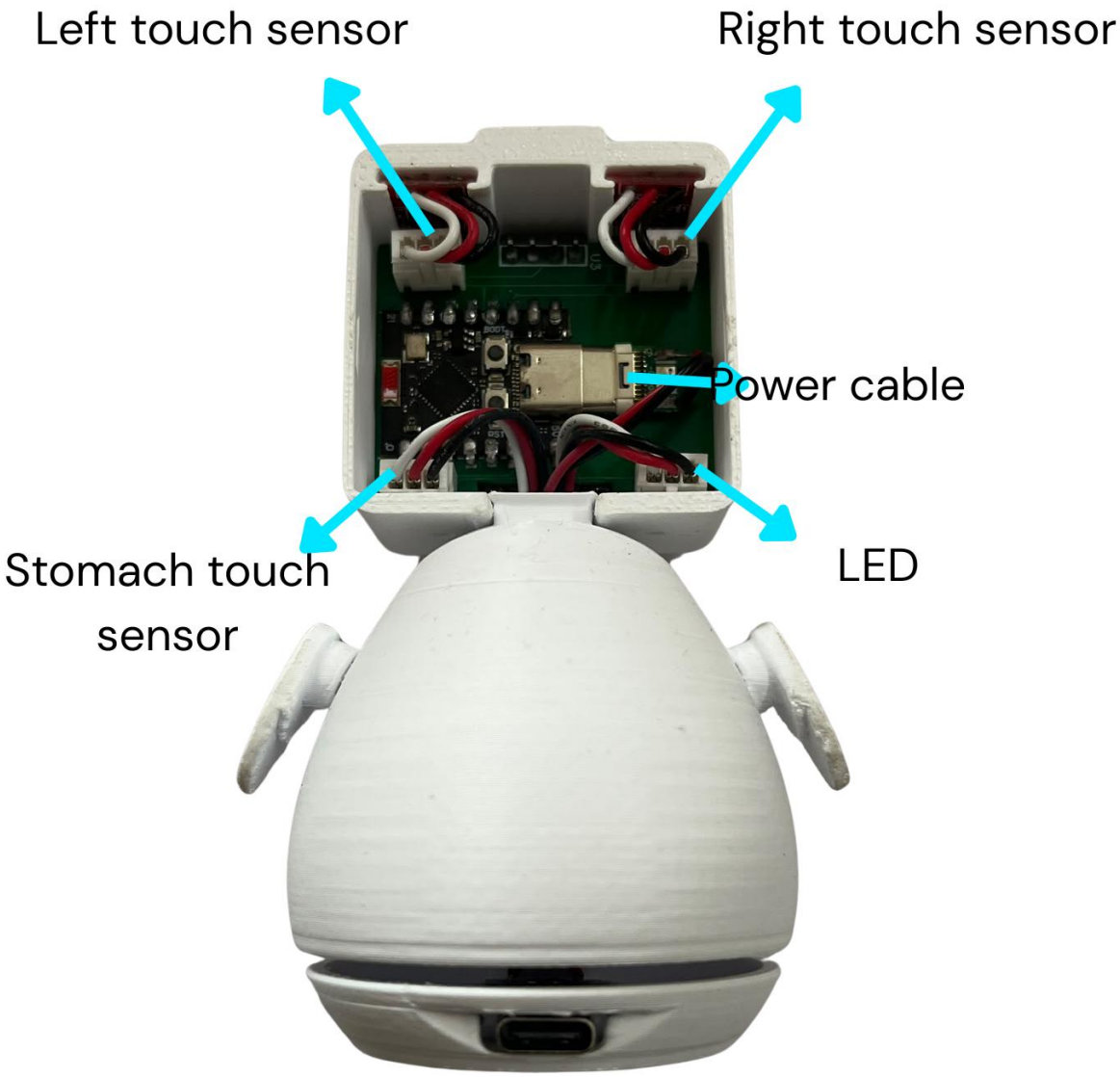

FIG 14.1

1 Put the PCB inside the body and connect all the connectors as per the diagram.

STEP 15

Close the back.

Close the back of the body.

PARTS

- Body



FIG 15.1

1 Close the back as shown in the picture.

STEP 16

Power up the bot.

Power up the bot using the USB-C cable provided.

PARTS

- USB-C cable (provided)



FIG 16.1

1 Power up the bot using the USB-C cable provided.

YOU MADE IT

First power-up.

Nameless has no power button. Plug in a USB-C cable and it wakes up. It runs completely offline — no Wi-Fi, no app, no account.

- Plug in USB-C. Nameless wakes up.

Learn the touch pads

Three pads: belly in the centre, one on each side of the head. No buttons.

DO THIS	YOU GET
Tap the belly	Opens the menu
Touch the head	Head-pet animation
Tap head pads in the menu	Scroll through the menu
Tap the belly in the menu	Launch the selected item
Hold the belly	Go back out



IF SOMETHING'S OFF

Troubleshooting.

PROBLEM	WHAT TO CHECK
Screen stays black	Check power source and check for shorting on the display pins.
Touch pad doesn't respond	Swap the touch sensors to see if it's a touch pad issue or if it's a PCB shorting. Check the soldering on the touch sensor and see if they are shorted using a multimeter.
LED doesn't light	Check if the power source is working. Check if you have connected the connector correctly instead of swapping it with the touch sensor.
Not powering on	Check continuity between the power USB cable, check power source. Check if 5v/GND are shorted on the esp32 board.

STILL STUCK : contact —support@dzbotics.com.



Built in India. Built by you.

Thank you for building Nameless with your own hands. We hope you enjoyed every step. If you ever need anything, just write to us at support@dzbotics.com and we will help you out.

WWW.DZBOTICS.COM · @DZBOTICS · SUPPORT@DZBOTICS.COM